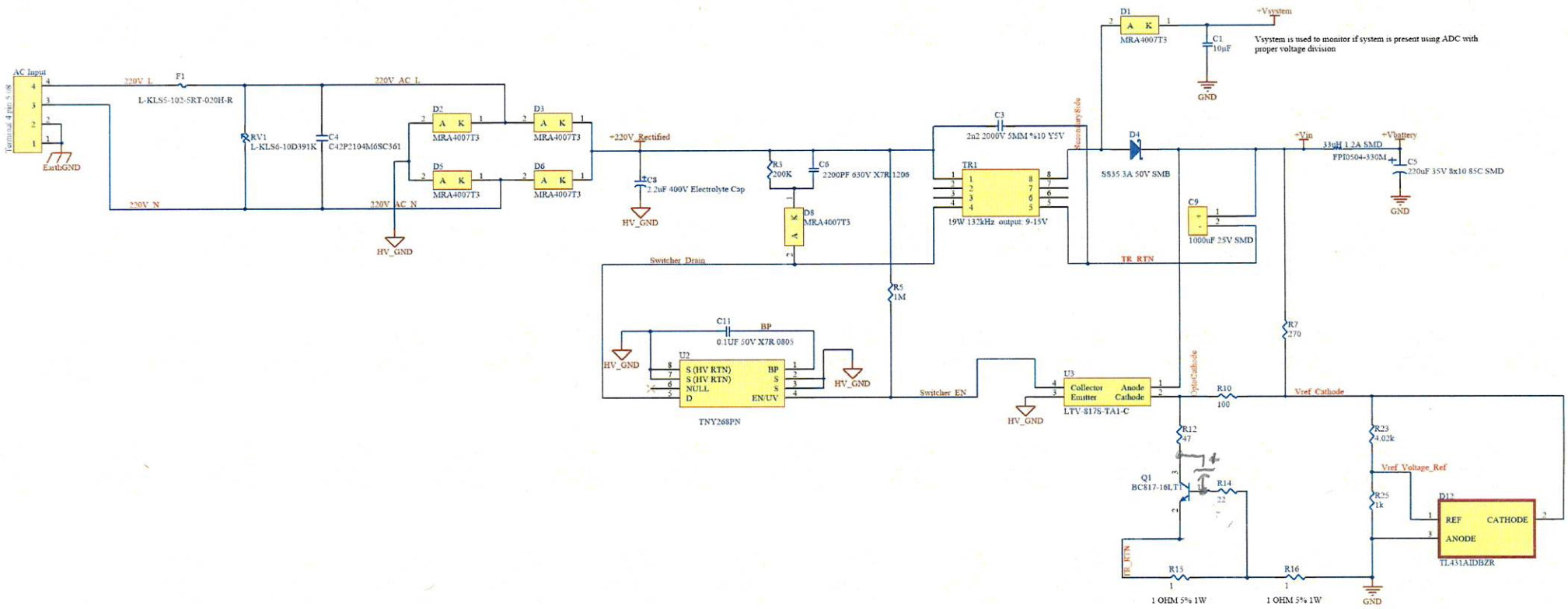

Make R14 larger, maybe 100Ω or so.