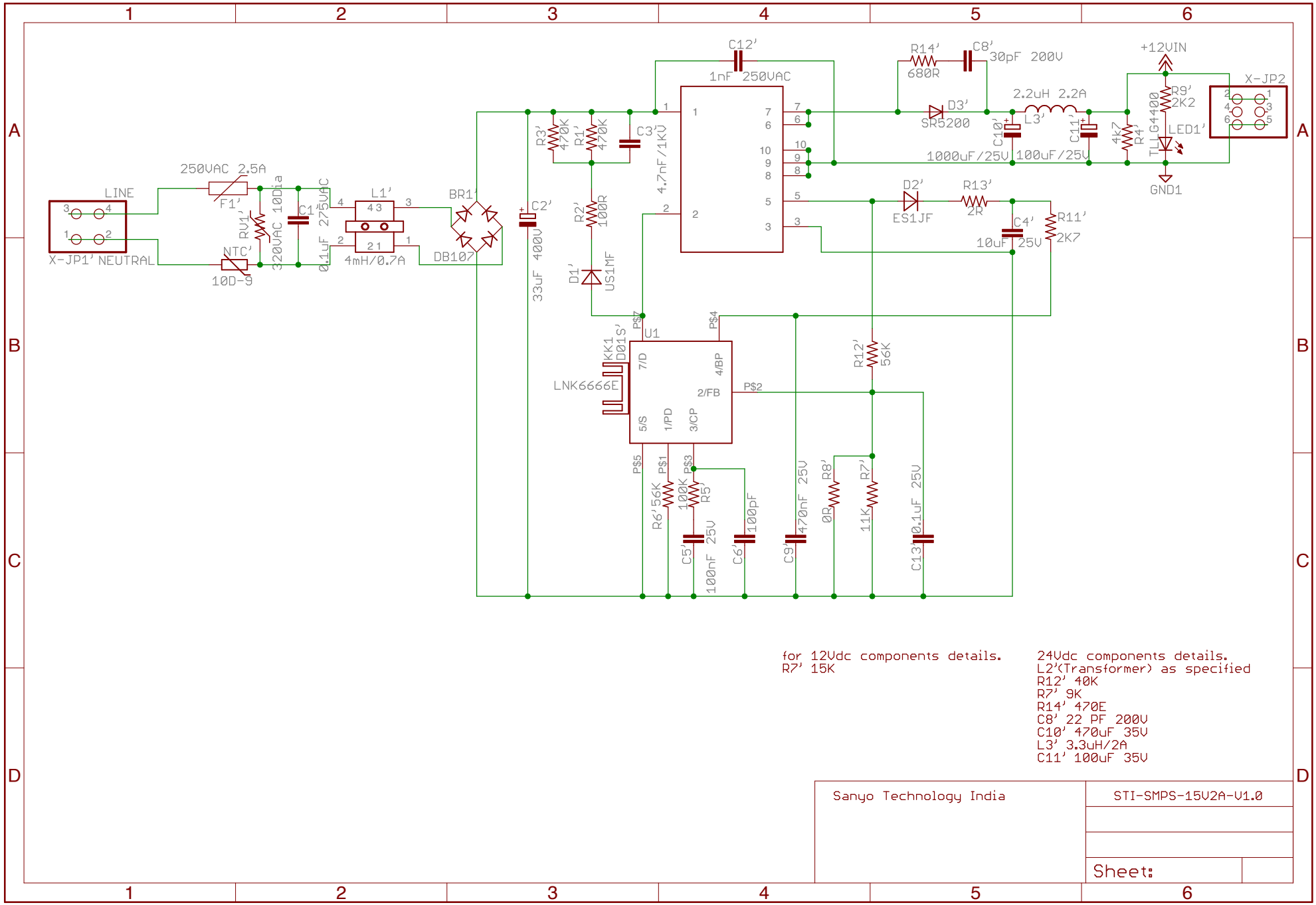

for 12Vdc components details.
R7' 15K

24Vdc components details.
L2'(Transformer) as specified
R12' 40K
R7' 9K
R14' 470E
C8' 22 PF 200V
C10' 470uF 35V
L3' 3.3uH/2A
C11' 100uF 35V

Sanyo Technology India	STI-SMPS-15V2A-V1.0
	Sheet: